06/2005

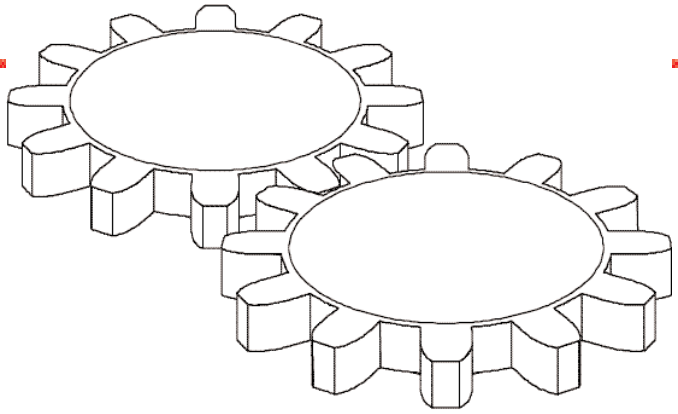

Mod: E65/PR4T

Production code: 65/40 FTRE

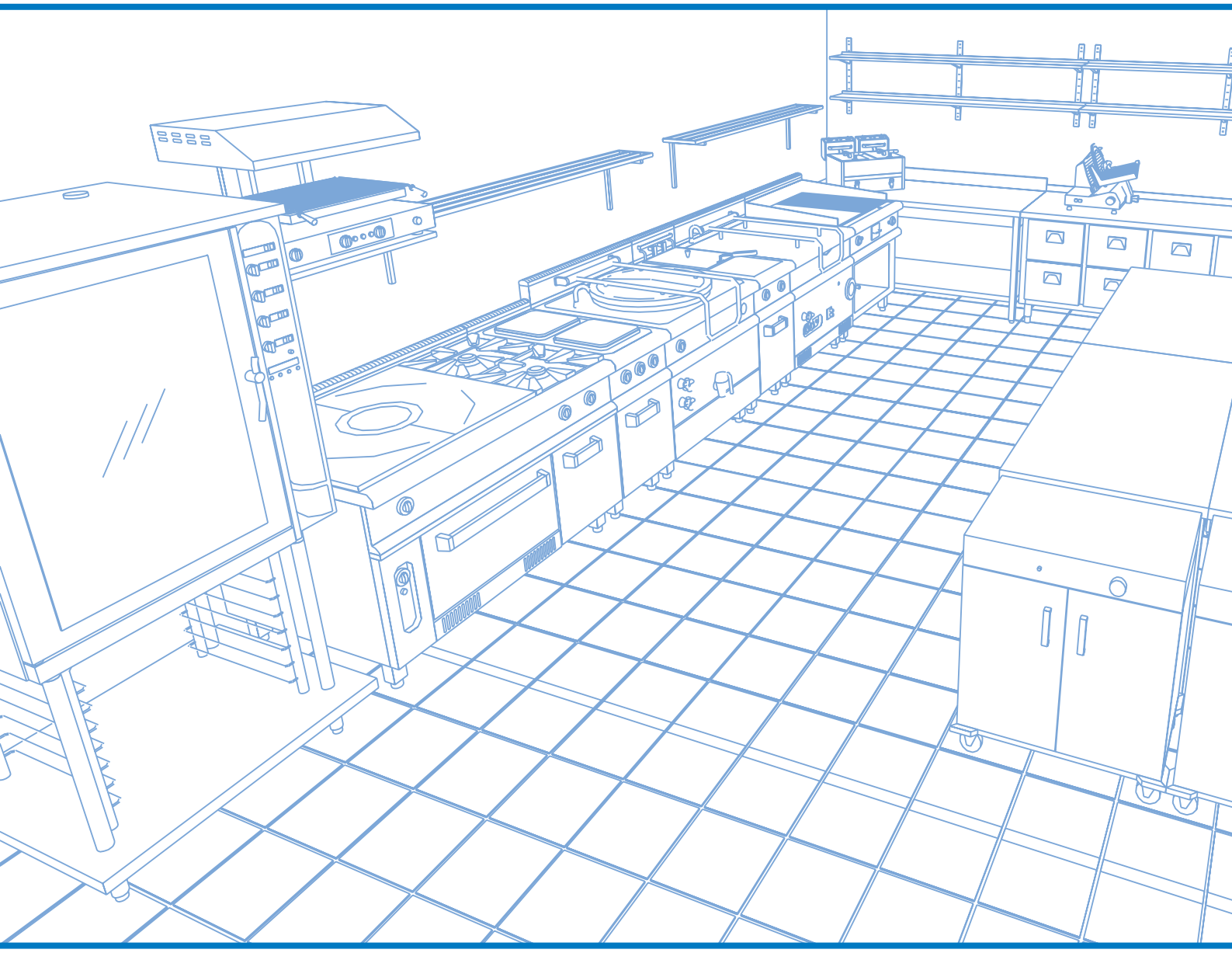

Diamond©
The catering program

LIST OF SPARE PARTS
code 253.017.00

ELECTRIC FRY TOPS

ED. 01-99

MOD. 65/40 FTE
MOD. 65/40 FTRE

ITEM	CODE	MODIFICATION REF								DESCRIPTION	PRICE
1	661.000.00									15A-EGO 49.41015.300 ang. switch	
2	661.007.00									100-350°C EGO 55.34062.803 3-ph. thermostat	
3	623.008.00									Thermostat bulb fixing	
4	612.003.00									Knob assembly 50-300°C OD 62	
5	663.001.00									41F2 orange pilot light + tooth	
6	663.000.00									41F2 green pilot light + tooth	
7	682.003.00									Index plate	
8	665.002.00									Heating element for FTE 1500W 230V	
9	622.005.00									Size 40 electric top base	
11	623.007.00									Terminal board support	
12	623.006.00									Terminal board cover	
13	663.005.00									PA 44 4-pole terminal board	
14	622.001.00									Heating elements fixing plate	
15	635.001.00									Reinforcement for heating elements plate	
16	622.018.00									Heating elements protection 65/40 FTE	
18	622.008.00									Fry-top drawer support	
19	611.007.00									Fry-top drawer assembly	
20	611.068.00									FTE 40 control panel ass.	
22	611.128.00									Neutra rear upstand ass. FT40	
24	611.110.00									Top-plain griddle-sides ass. 40	
24	611.111.00									Top-scored griddle-sides ass. 40	
28	623.002.00									Control panel fixing bracket	
29	651.001.00									D.30xH.20 foot	
30	661.013.00									EGO 617078 thermostat fixing bracket	
36	621.027.00									Size 40 back panel	
37	663.027.00									PG 16-art. V.TEC 16 relief cable strain	
38	663.023.00									Check nut PG 16 CN 14P	
39	623.212.00									FTE safety thermostat support	
40	661.045.00									Safety thermostat+sheath 350°C-55.32562.802	
41	611.320.00									Assembly of main earth screws/equipotential	

MOD. 65/40 FTE
MOD. 65/40 FTRE
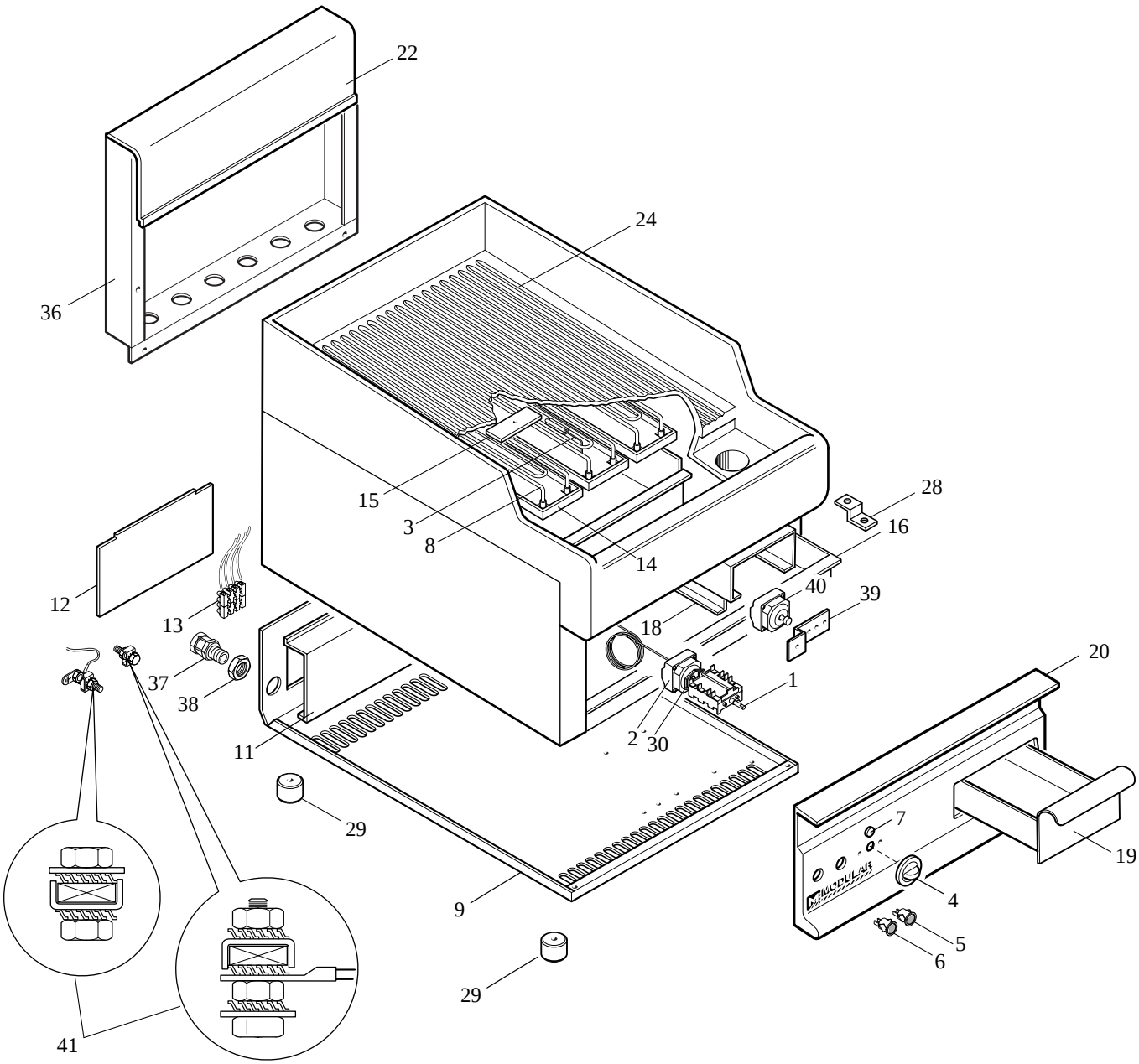
ED. 01-99
TAV. 253.016.00